BUTTERFLY VALVES · LUGGED PATTERN

# TTV Aluminium Bronze Lugged Butterfly Valve – EPDM Seat

Manufacturer: **TTV, S.A. (Spain)** Model: **80LM580 (EPDM seat)** Sizes listed: **DN40 – DN200** Shopify ref: **10094745911560**



| AT A GLANCE | |
|---|---|
| Valve type | **Concentric, resilient-seated butterfly valve, fully lugged body** |
| Body | **Nickel-aluminium bronze, ASTM B148 C95500** |
| Disc | **Nickel-aluminium bronze, ASTM B148 C95500** |
| Shaft | **Nickel alloy, Monel K-500** |
| Seat | **EPDM** |
| Fits between | **PN10 / PN16 (EN 1092-1) and ANSI Class 150 flanges** |
| Top flange | **ISO 5211 F5/F7 (DN32–100), F7 (DN125–200)** |
| WRAS | **Approved (see Approvals)** |

## PRODUCT OVERVIEW

The TTV 80LM580 is a concentric (zero-offset), resilient-seated butterfly valve with a fully lugged body with tapped lug holes drilled to PN10, PN16 and ANSI 150 patterns. Construction is a nickel-aluminium bronze body, nickel-aluminium bronze disc, nickel alloy shaft (Monel K-500) and an EPDM seat.

The valve is supplied with a bare shaft and an ISO 5211 top flange, so it can be fitted with a lever, gearbox or actuator. Face-to-face length follows EN 558 Series 20, ISO 5752 Series 20, API 609 Table 1 and BS 5155 Series 4. TTV pressure tests the body at 1.5 × PN and the seat at 1.1 × PN to EN 12266-1 / ISO 5208, with a zero-leakage tightness test.

## KEY FEATURES

- Nickel-aluminium bronze body with nickel-aluminium bronze disc
- Nickel alloy shaft (Monel K-500)
- EPDM seat
- Lug holes tapped for PN10, PN16 and ANSI 150 bolting
- ISO 5211 top flange for direct lever, gearbox or actuator mounting
- Face-to-face to EN 558 Series 20 / ISO 5752 Series 20 / API 609
- Seat leakage tested to ISO 5208 (zero leakage) and API 598

## DETAILED TECHNICAL SPECIFICATION

### CONSTRUCTION

| | |
|---|---|
| Body | Nickel-aluminium bronze, ASTM B148 C95500 |
| Disc | Nickel-aluminium bronze, ASTM B148 C95500 |
| Shaft | Nickel alloy, Monel K-500 |
| Seat | EPDM |
| Design | Concentric resilient-seated, lug pattern, bare shaft |

### OPERATING CONDITIONS

| | |
|---|---|
| Temperature range | Not stated in the source held – refer to Wras Valves |

### CONNECTIONS & STANDARDS

| | |
|---|---|
| Mounting between flanges | PN10/16 to ISO 7005, DIN 2501, EN 1092-1; ANSI Class 150 to ASME B16.5 |
| Face to face | EN 558 Series 20; ISO 5752 Series 20; API 609 Table 1; BS 5155 Series 4 |
| Top flange | ISO 5211 – F5/F7 (DN32 to DN100), F7 (DN125 to DN200) |
| Tolerances | ISO 2768-M |

### TESTING

| | |
|---|---|
| Pressure test | EN 12266-1, ISO 5208 – body 1.5 × PN, seat 1.1 × PN |
| Tightness test | ISO 5208, zero leakage; API 598 |

## DIMENSIONS & WEIGHTS (MM, KG)

| DN | inch | A | B | D | E | ØF | G | J | PN10 ØK / N×T | PN16 ØK / N×T | ANSI 150 ØK / N×T | ISO 5211 | kg |
|---|---|---|---|---|---|---|---|---|---|---|---|---|---|
| **40** | 1½" | 205 | 140 | 88 | 33 | 9.5 | 14 | 8 | 110 / 4×M16 | 110 / 4×M16 | 98.5 / 4×½" | F5/F7 | 3 |
| **50** | 2" | 228 | 156 | 88 | 43 | 9.5 | 14 | 8 | 125 / 4×M16 | 125 / 4×M16 | 120.6 / 4×⅝" | F5/F7 | 3.5 |
| **65** | 2½" | 248 | 161 | 88 | 46 | 12 | 16 | 9 | 145 / 4×M16 | 145 / 4×M16 | 139.7 / 4×⅝" | F5/F7 | 4.5 |
| **80** | 3" | 265 | 169 | 88 | 46 | 14 | 16 | 11 | 160 / 8×M16 | 160 / 8×M16 | 152.4 / 4×⅝" | F5/F7 | 6.5 |
| **100** | 4" | 298 | 187 | 88 | 52 | 14 | 20 | 11 | 180 / 8×M16 | 180 / 8×M16 | 190.5 / 8×⅝" | F5/F7 | 8 |
| **125** | 5" | 331 | 206 | 105 | 56 | 17 | 20 | 14 | 210 / 8×M16 | 210 / 8×M16 | 215.9 / 8×¾" | F7 | 11 |
| **150** | 6" | 349 | 215 | 105 | 56 | 17 | 20 | 14 | 240 / 8×M20 | 240 / 8×M20 | 241.3 / 8×¾" | F7 | 12 |
| **200** | 8" | 430 | 255 | 105 | 60 | 21 | 24 | 17 | 295 / 8×M20 | 295 / 12×M20 | 298.5 / 8×¾" | F7 | 18.5 |

Dimensions from the TTV source datasheet listed in Source references. The manufacturer states that dimensions and standards may change without notice.

## DIMENSIONAL DRAWING

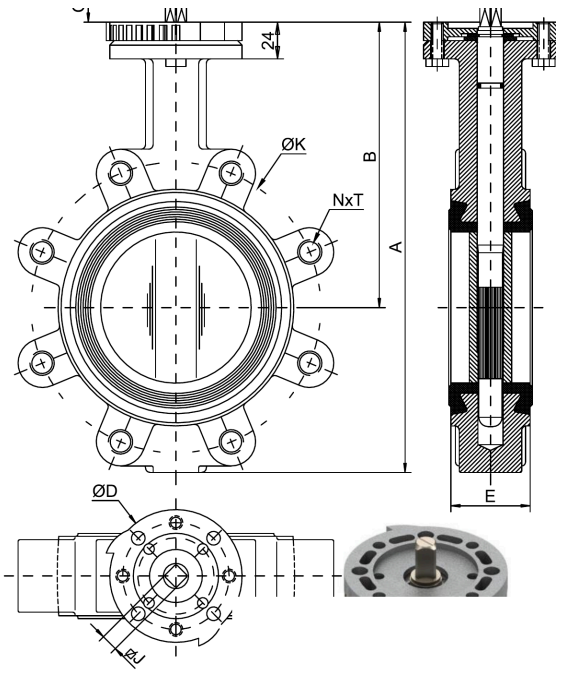


Manufacturer drawing reproduced from the TTV source datasheet listed in Source references.

## APPROVALS

### WRAS approved

| | |
|---|---|
| Status | **WRAS approval confirmed by Wras Valves** |
| Approval details | **Approval certificate and supporting letter available from Wras Valves on request** |

Confirm current approval status on the WRAS Approvals Directory (wrasapprovals.co.uk) before specification. Water fittings must comply with the Water Supply (Water Fittings) Regulations 1999 (or the Scottish Water Byelaws 2014 / Northern Ireland Regulations 2009); WRAS approval is one recognised way of demonstrating this.

## TYPICAL APPLICATIONS

- Isolation and flow control in water systems within the seat temperature range

## INSTALLATION & OPERATION

- Install between PN10/PN16 (EN 1092-1) or ANSI Class 150 (ASME B16.5) flanges; lug holes are tapped to the bolting shown in the dimension table
- Fit levers, gearboxes or actuators to the ISO 5211 top flange (F5/F7 or F7 according to size)

## TECHNICAL NOTES

- Pressure classes are nominal. Check the pressure–temperature limits for the application with the manufacturer's current data.
- Source datasheet held is for the NBR-seat version (80LM580N0). Body, disc, shaft and dimensions are taken from it; the EPDM seat is as listed by Wras Valves. Temperature range omitted until the TTV 80LM580E0 DN32-200 sheet is obtained.

## SOURCE REFERENCES

1. TTV datasheet 'Lug DN32-200 | PN10-16 & ANSI 150 – Valve with bare shaft – Model 80LM580 NITRILE', ref. L3220080M580N0, Rev 0, dated 20 Jan 2021 (NBR-seat version: body, disc, shaft and dimensions only)
2. Wras Valves product listing 10094745911560 (size and pressure options offered)

**Important.** This datasheet is a supplier technical summary compiled by Wras Valves from the manufacturer and approval sources listed. It is provided for guidance and product identification only. Wras Valves does not independently test or certify products. Manufacturers may change designs, materials and data without notice: always check current manufacturer information, the WRAS Approvals Directory and the precise requirements of the application before selection and installation. Pressure ratings are nominal and may be reduced at elevated temperature.